ALIGNING STRUT PXL850

Instruction for assembly and use

Weight: 56,5 kg

Aligning strut PXL850 light is designed for bracing and ajustment of pre-fabricated walls, columns and formworks. Alignment strut can be adjustment in lenghts 6,24 – 8,50 m in two steps. Alignment strut have telescopic design and its first step of adjustment. Second step is adjusted by spindle with an encapsulated thread is used for fine-tuning. In first step telescopic adjustment should be done by moving inner and outer tubes to reach requested length. Adjustmnet holes from each tube should be in the same place and secured by bolt PXL765/850 with cotter pin. Second step of adjutment is done with spindles placed at the ends. Rotating them in right (clockwise) direction ends are turns off and increases its length. By rotating it in left direction length will be reduced.
Prior to use the spindles must be drawn out to the same length on both sides. Only then it is sure that the defined maximal length can be achived and no damages will occur to the alignment struts.
The outer tube have two holes ø14 in intervals of 10 cm and the inner tube have them ten in intervals of 20 cm each. Control holes used to check quality of screws are placed at the end of inner and outer tubes. **Its forbiden to use them as adjustment holes.**

Upper connection of strut is done by using quick-action fastener anchored in prefabricated element. Visual check must be done to veryfy if bolt 16x87 is secured by cotter pin.

Lower plate must be anchored in solid concrete area using hole ø18. Angle betwen alingment strut and anchoring ground must be in a range of 45 - 60°.

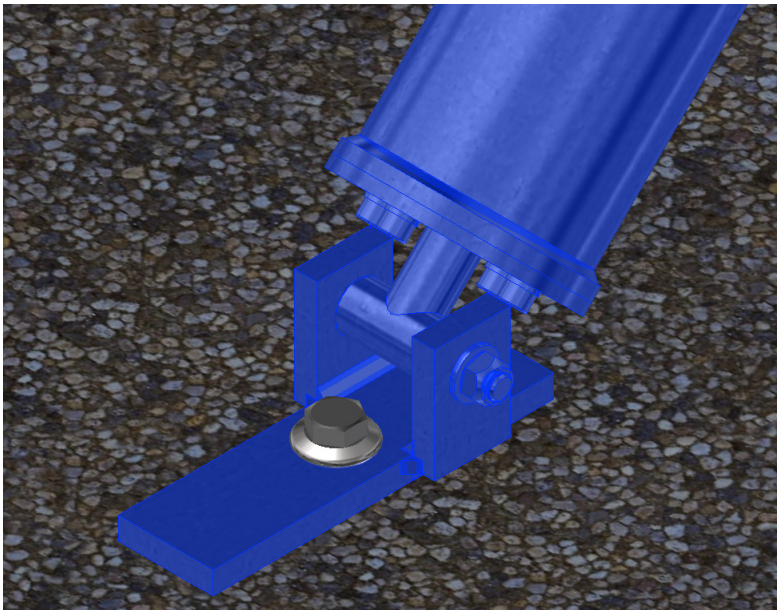

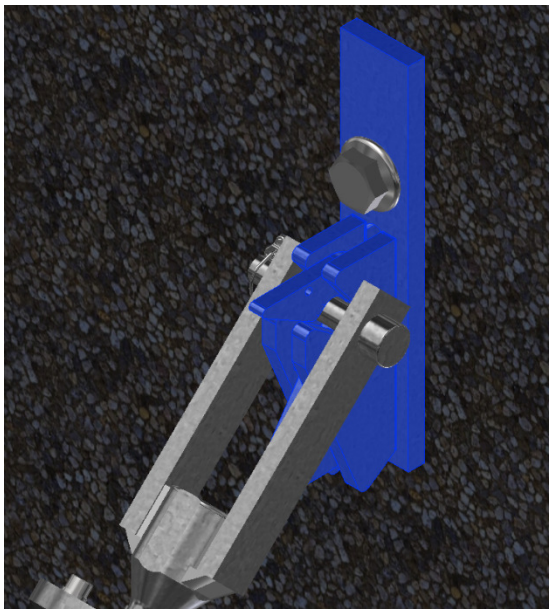

At both ends are heads screwed with M8x16 screws secured with spring washers. Before each use heads must to be inspected if the rigidity of the connection (screw tightening) is correctly and if its complete.

Aligning strut PXL850 Light MUST be checked at the construction site before each use to ensure that they are in perfect condition and function correctly. Its forbidden to use them if any spare parts are missing or any damages occure.

Ver. 1.0 - 04.05.2017.

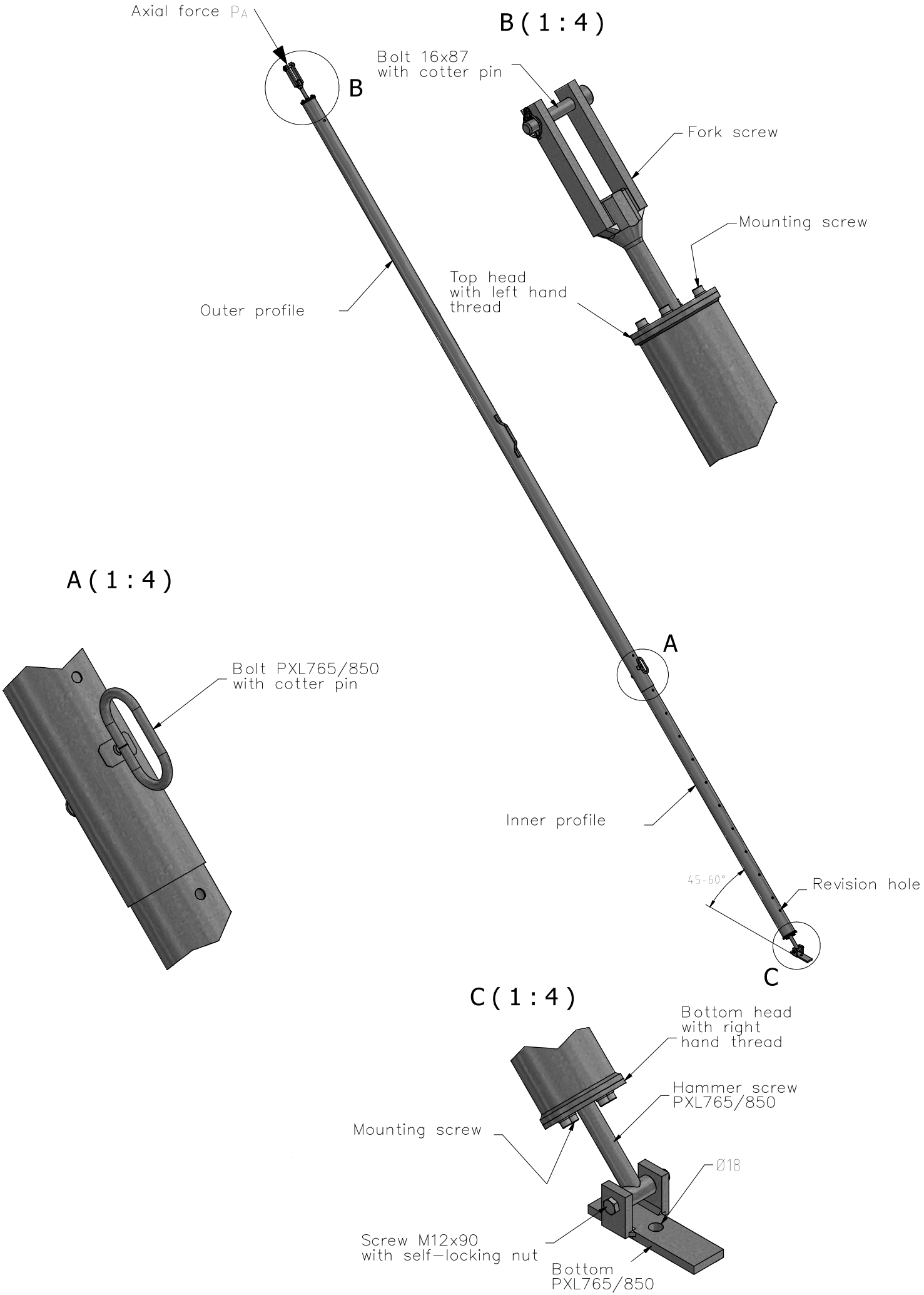
Axial force PA
B
B(1:4)
Bolt 16x87
with cotter pin
Fork screw
Mounting screw
Top head
with left hand
thread
Outer profile
A(1:4)
Bolt PXL765/850
with cotter pin
A
Inner profile
45-60°
Revision hole
C
C(1:4)
Bottom head
with right
hand thread
Hammer screw
PXL765/850
Mounting screw
Ø18
Screw M12x90
with self-locking nut
Bottom
PXL765/850

The following table shown the maximum permissible load in full range of adjustment.

Adjustment range [m]	Permissible load [kN]
6,3	20
6,4	20
6,5	20
6,6	20
6,7	20
6,8	20
6,9	20
7,0	20
7,1	20
7,2	20
7,3	20
7,4	20
7,5	19,46
7,6	19
7,7	18,55
7,8	18,11
7,9	17,7
8,0	17,29
8,1	16,9
8,2	16,52
8,3	16,16
8,4	15,8
8,5	15,46

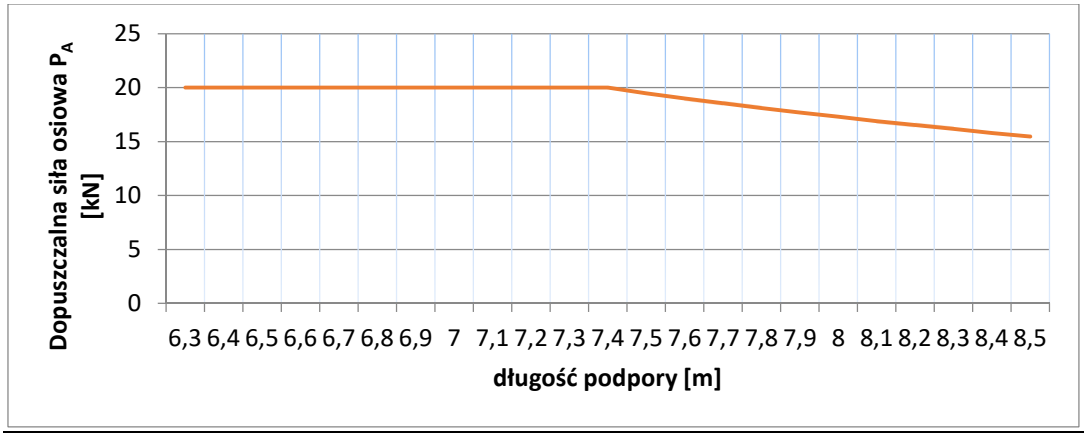

<u>Its forbidden</u> to use alignment struts with loads above values shown in that table.